ASSEMBLY INSTRUCTIONS

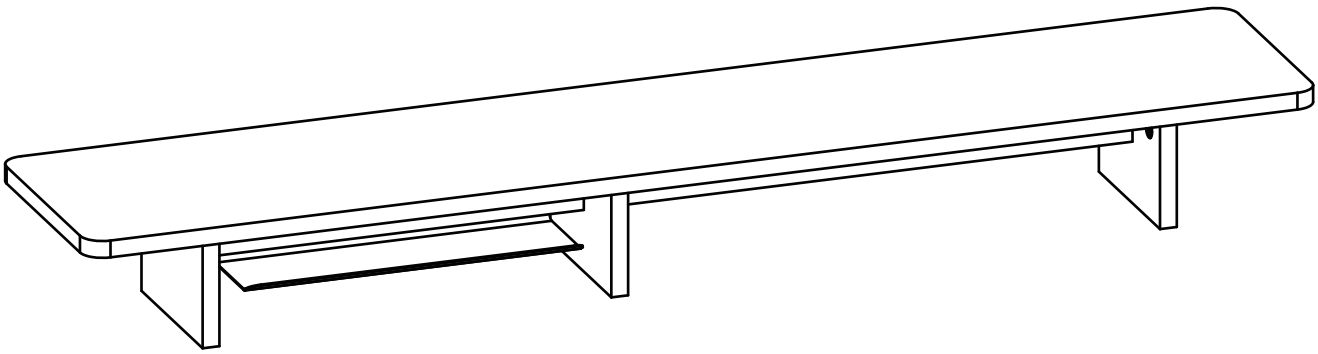

FEZiBO

Life is Fezibo.

V1

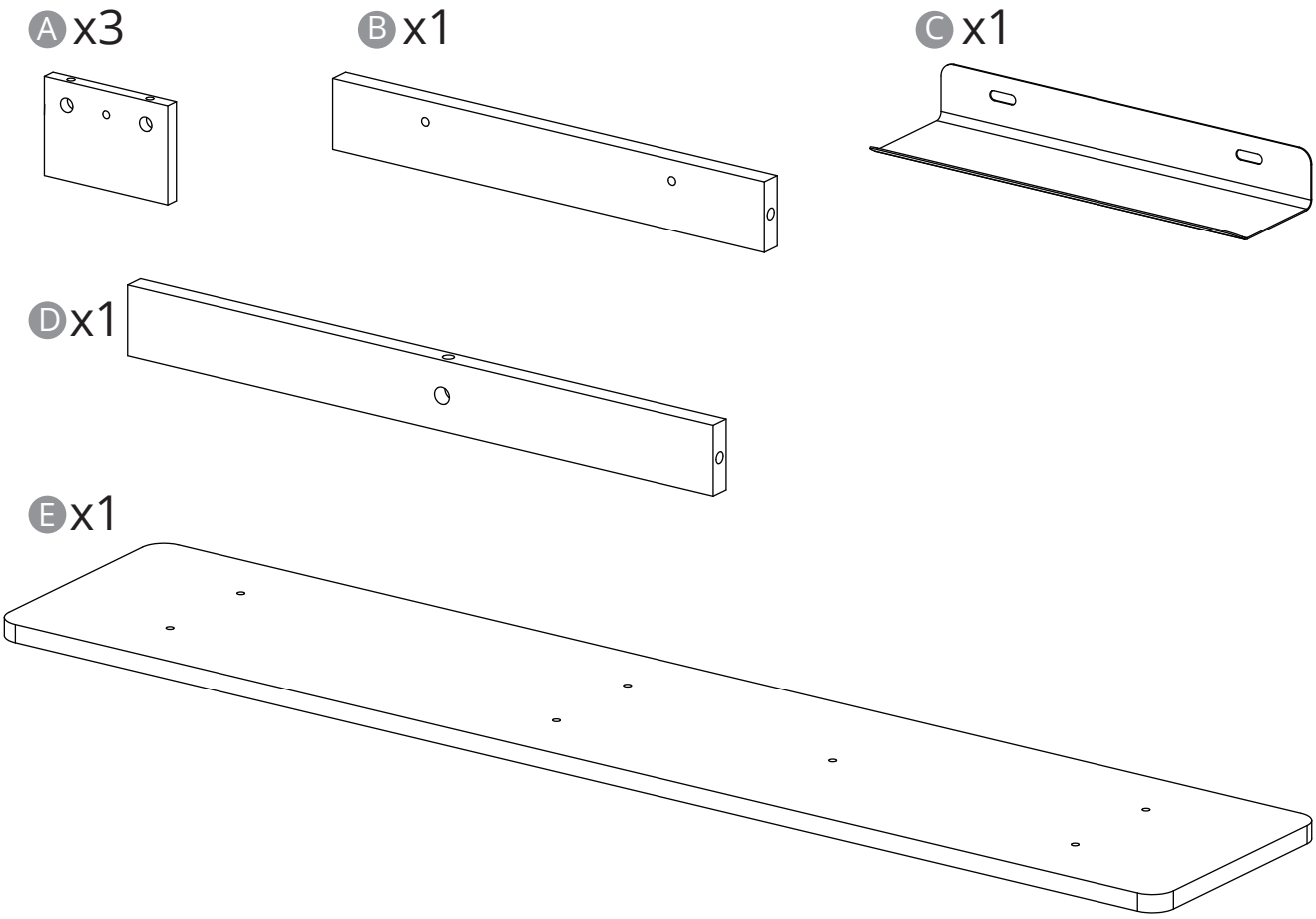
A x3
B x1
C x1
D x1
E x1

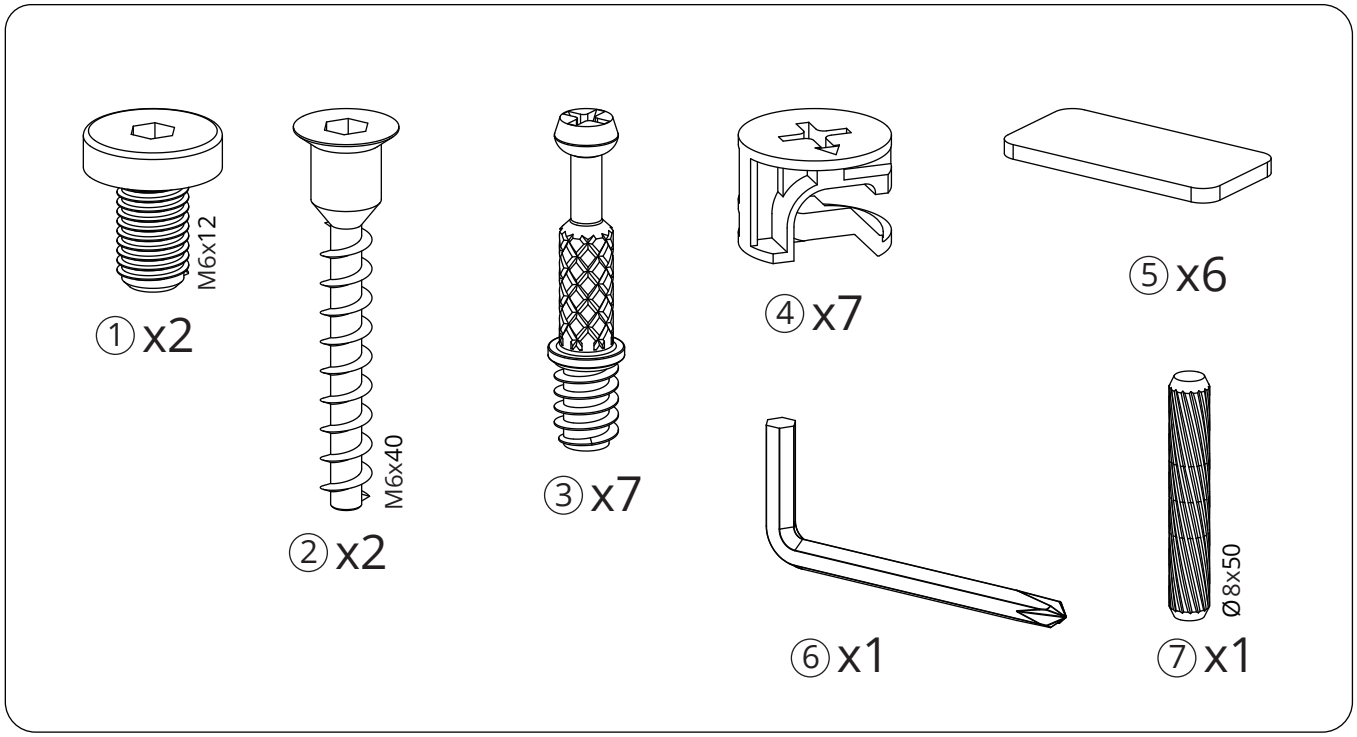
M6x12
① x2
M6x40
② x2
③ x7
④ x7
⑤ x6
⑥ x1
Ø8x50
⑦ x1

1

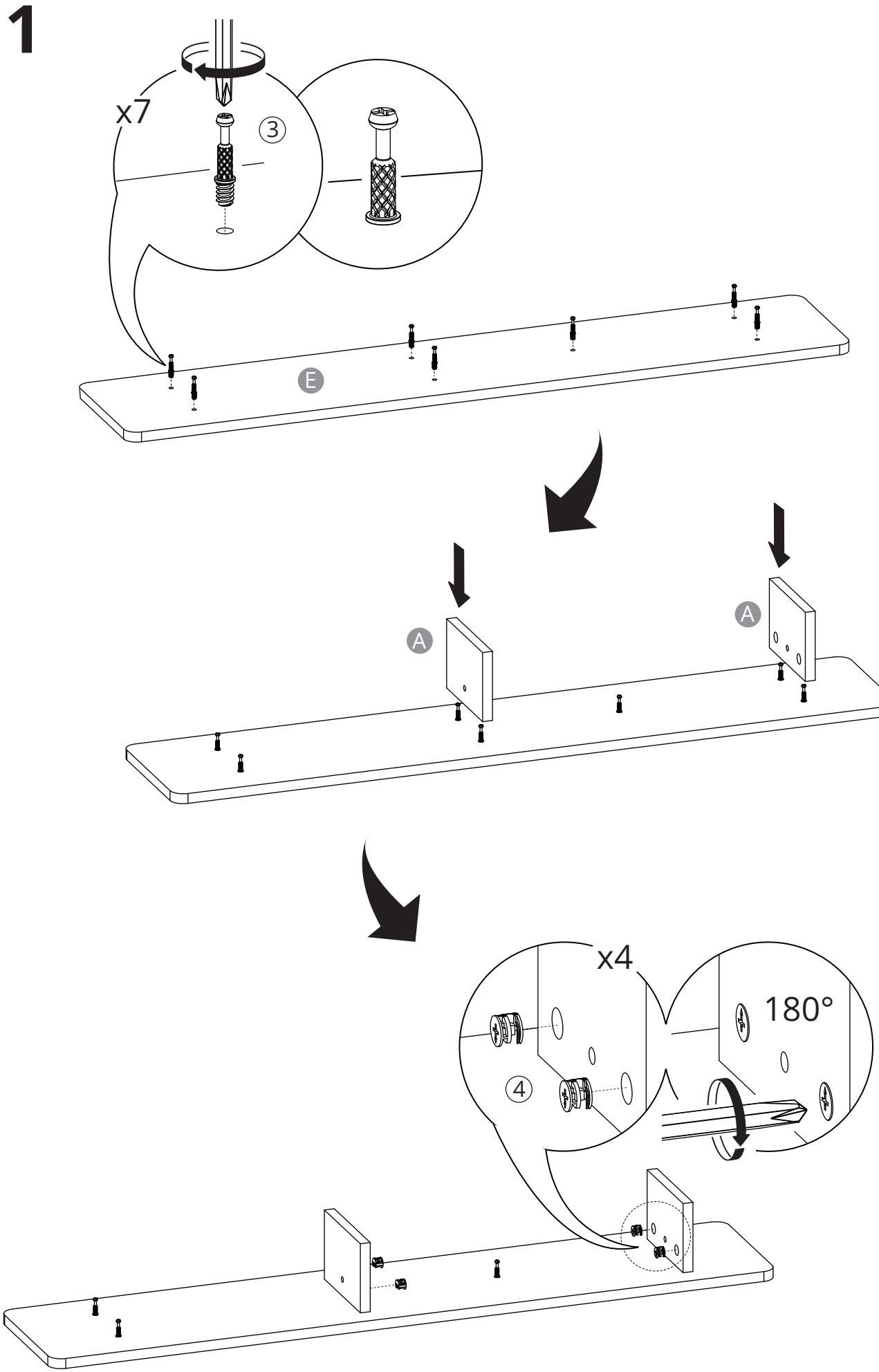

2

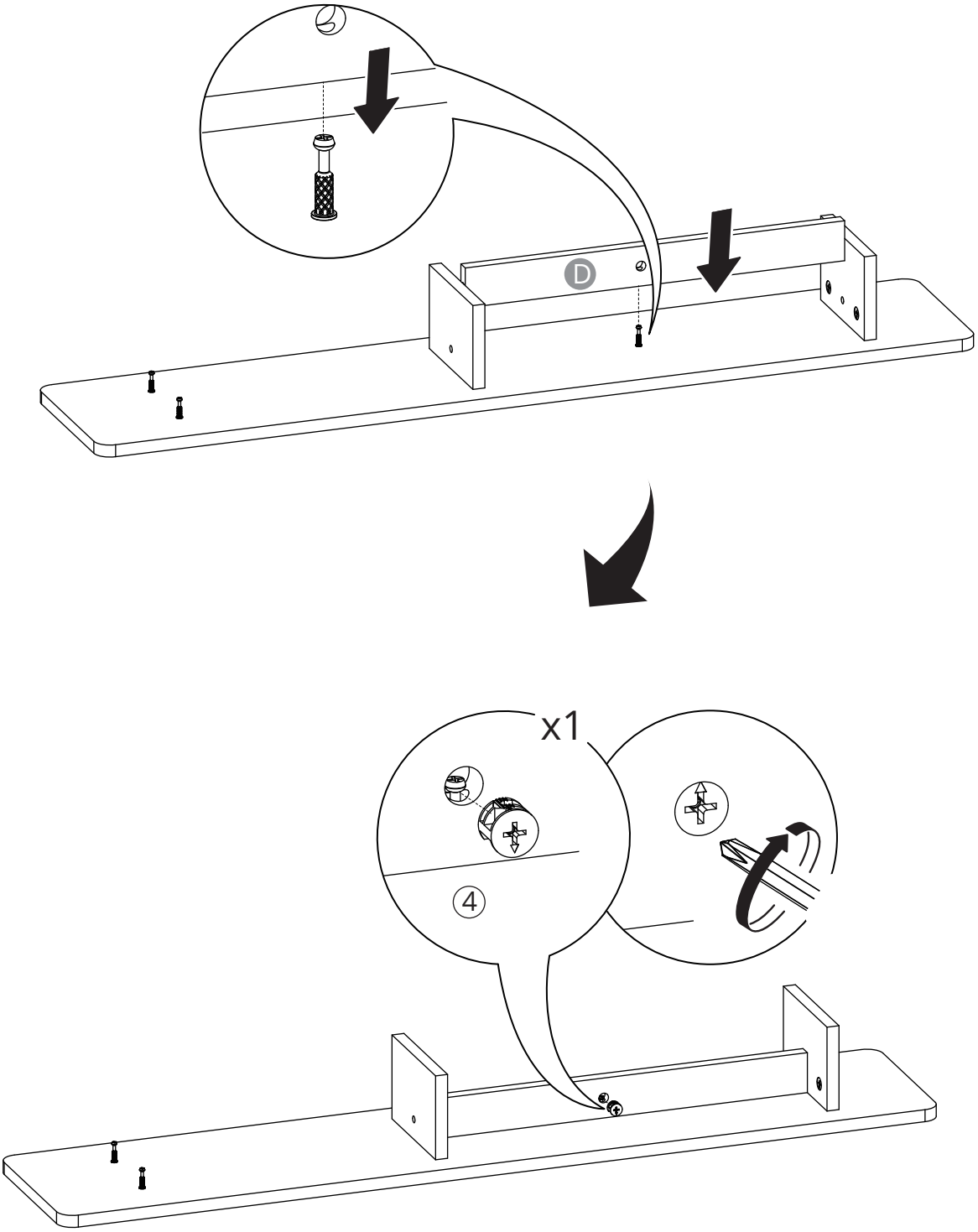

3

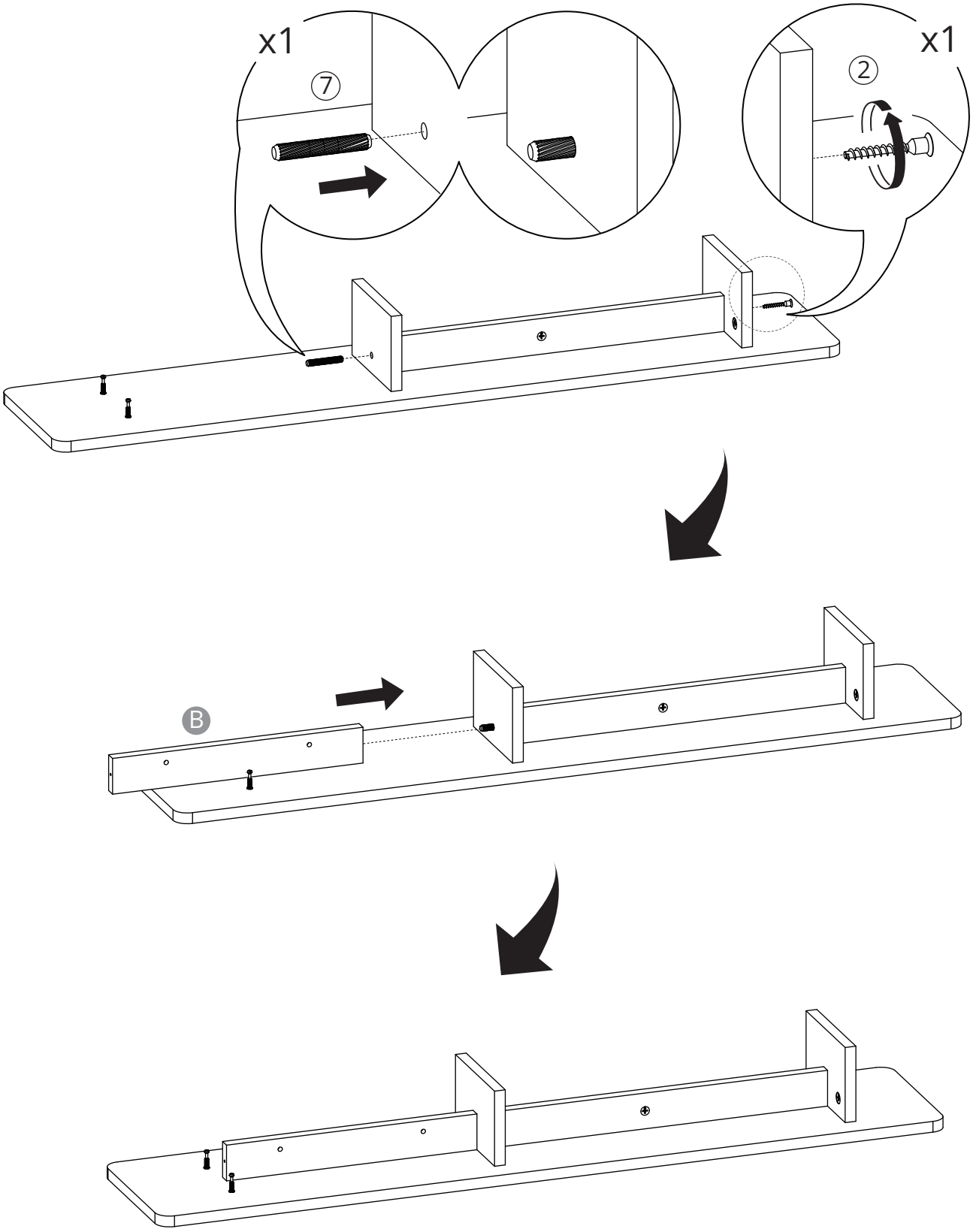

4

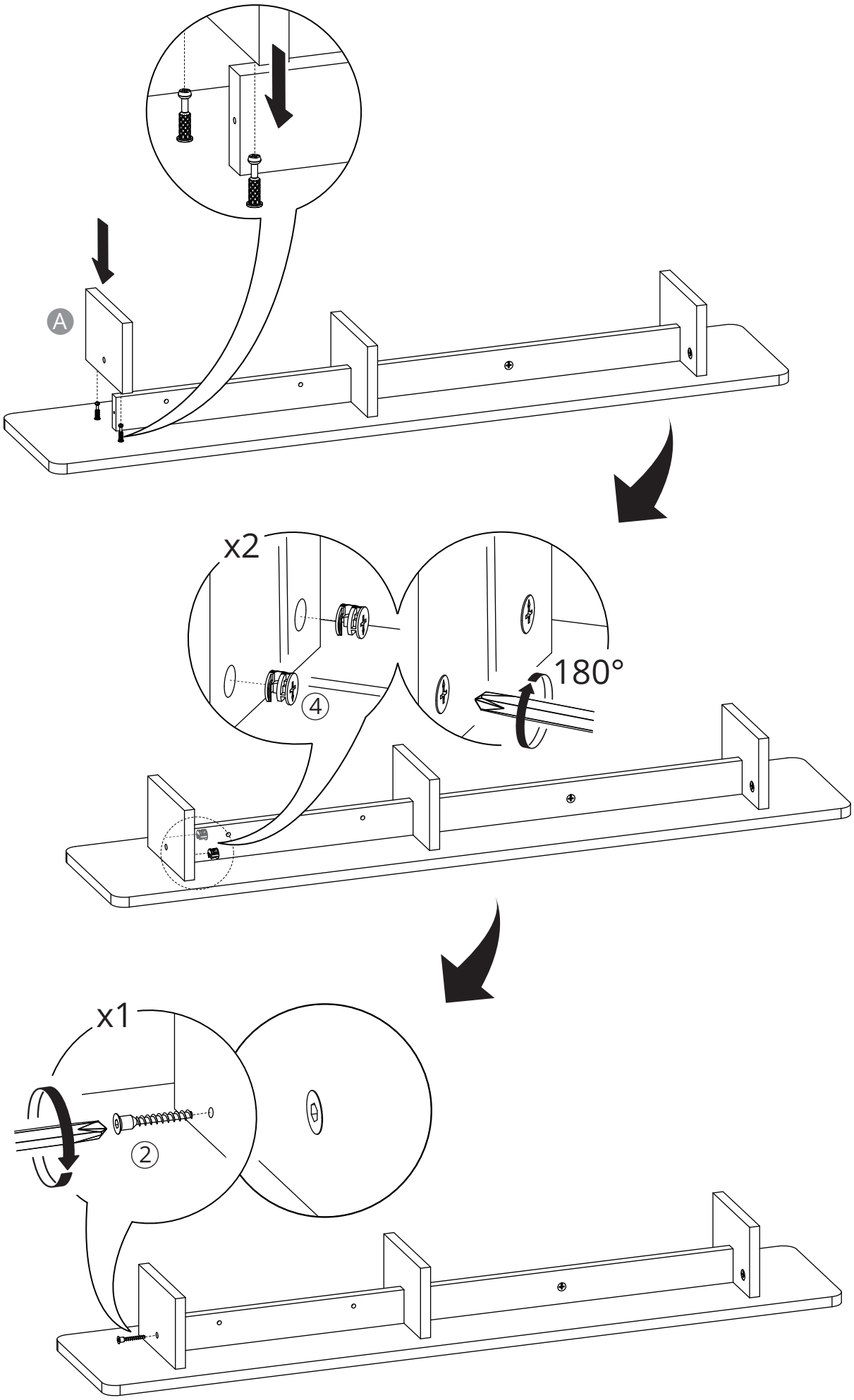

5

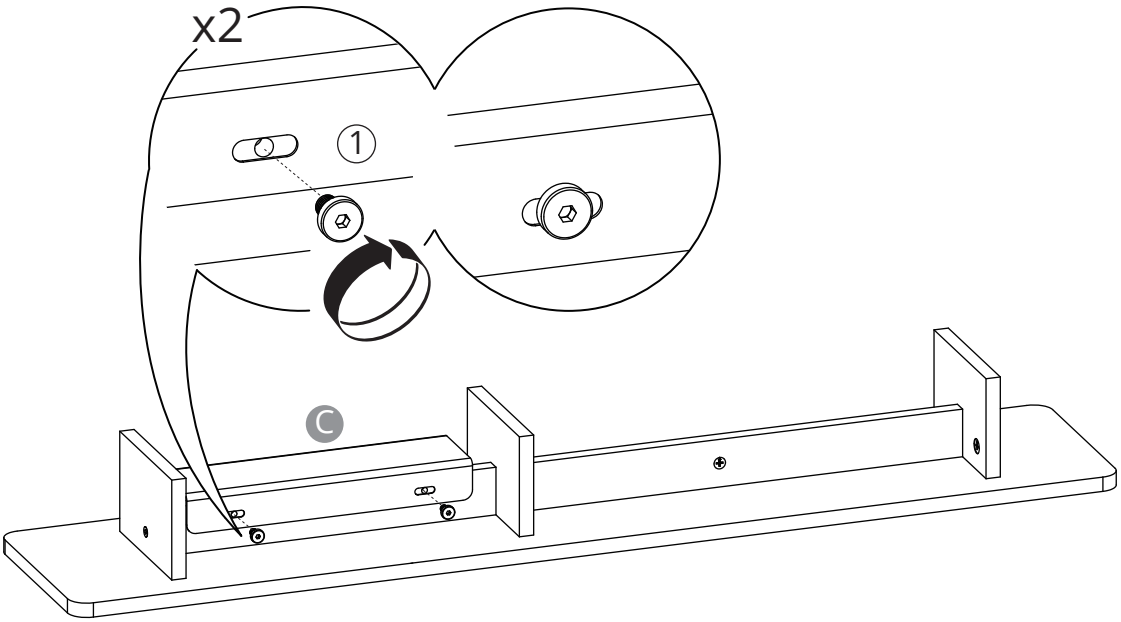

6

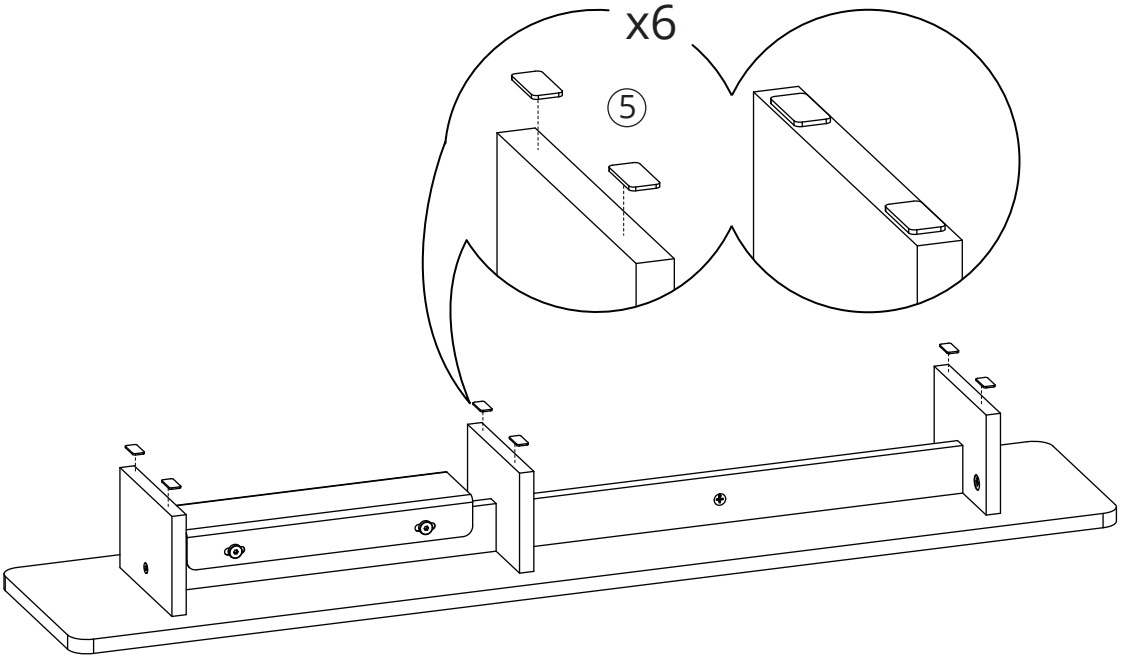
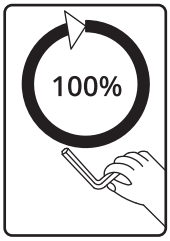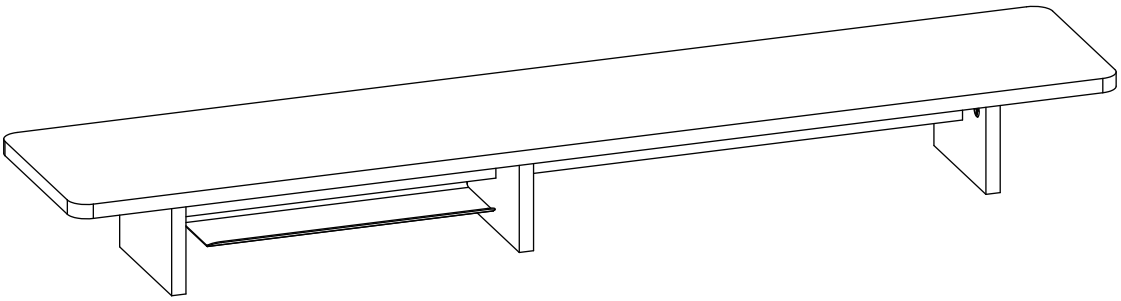
7