ASSEMBLY INSTRUCTIONS

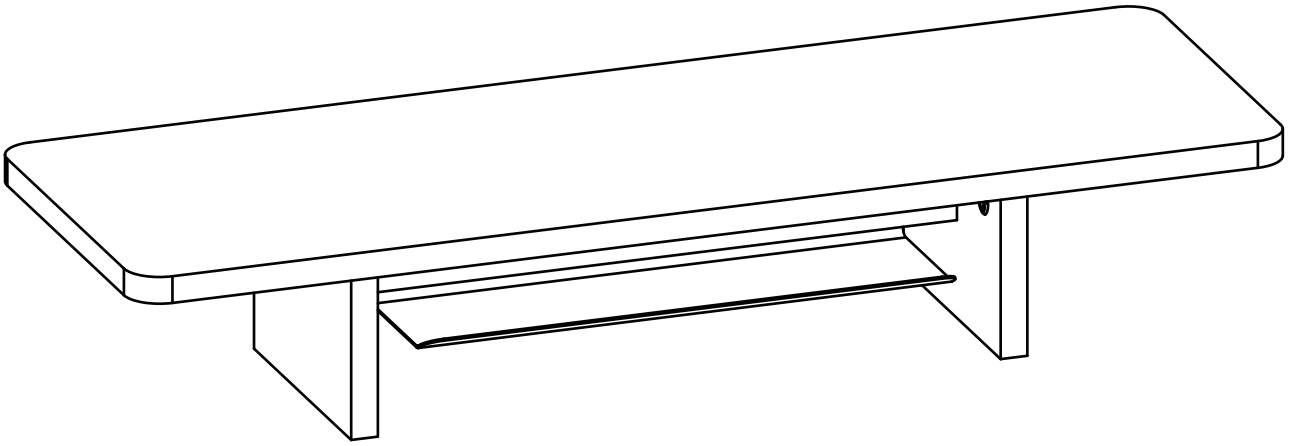

FEZiBO

Life is Fezibo.

V1

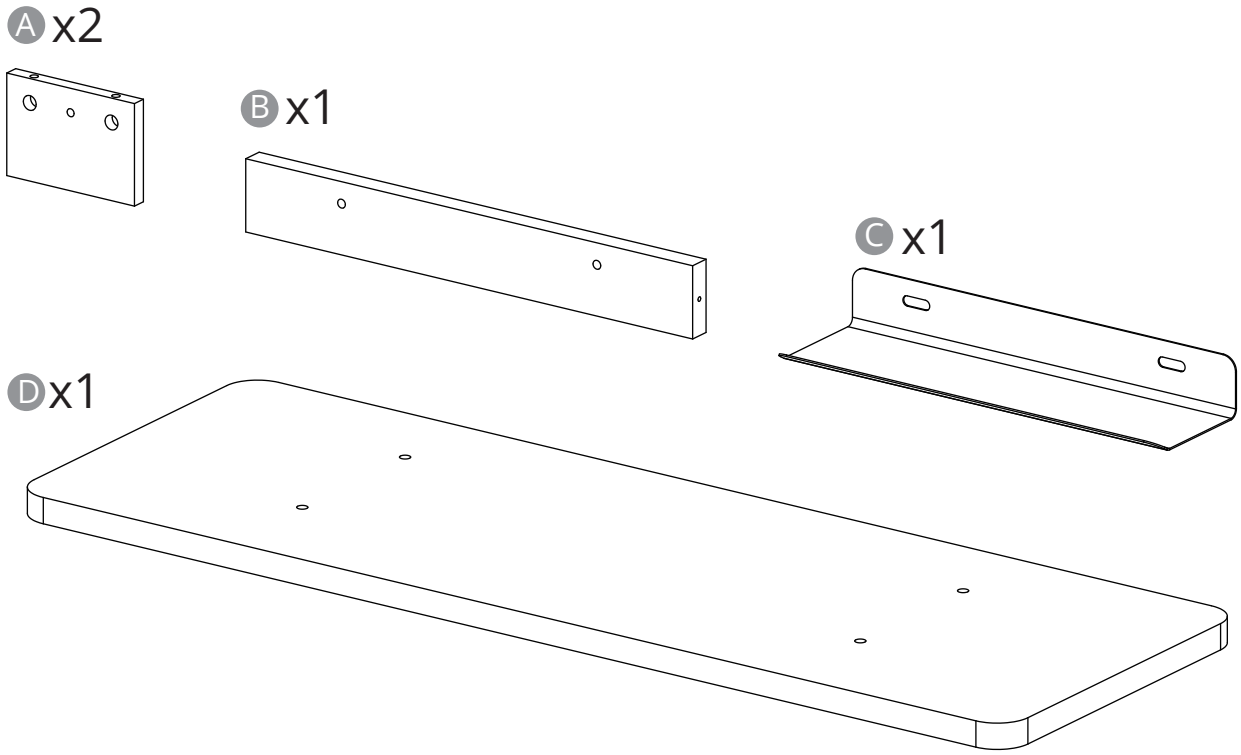
A x2
B x1
C x1
D x1

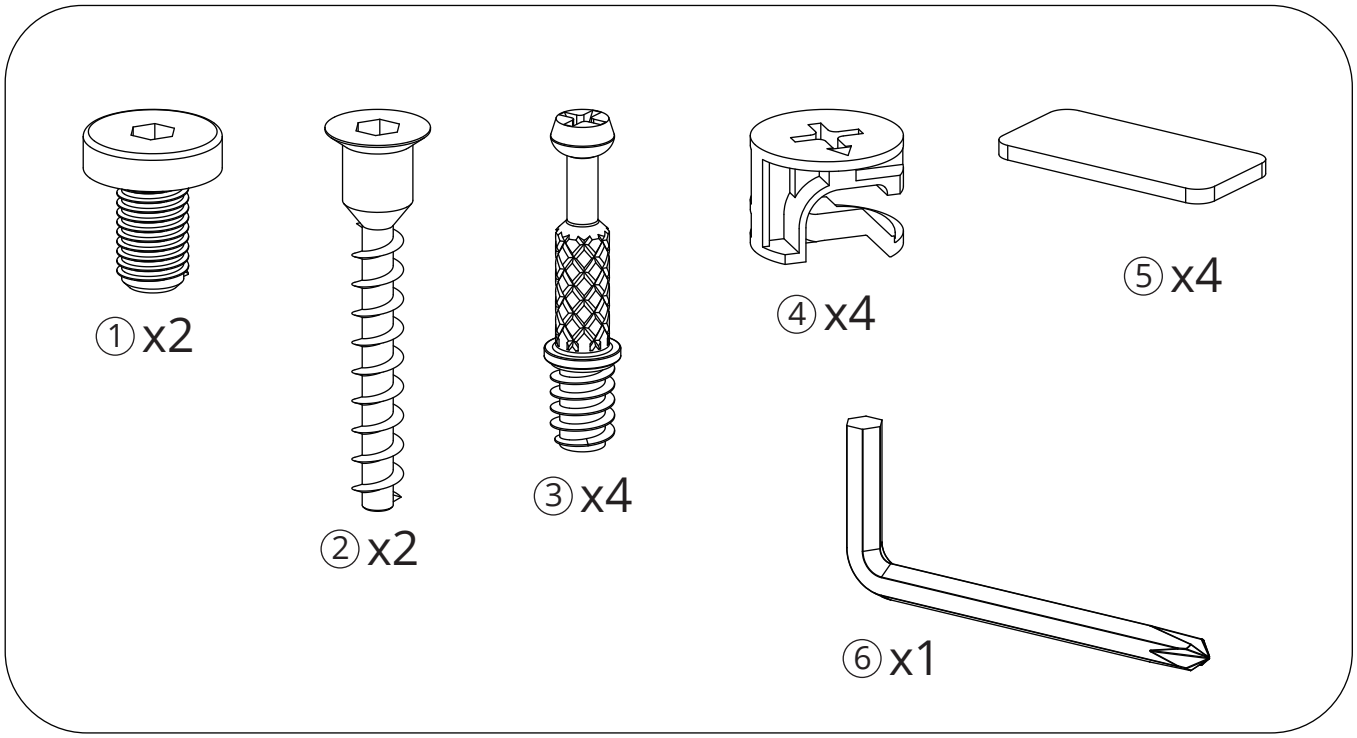
① x2
② x2
③ x4
④ x4
⑤ x4
⑥ x1

1

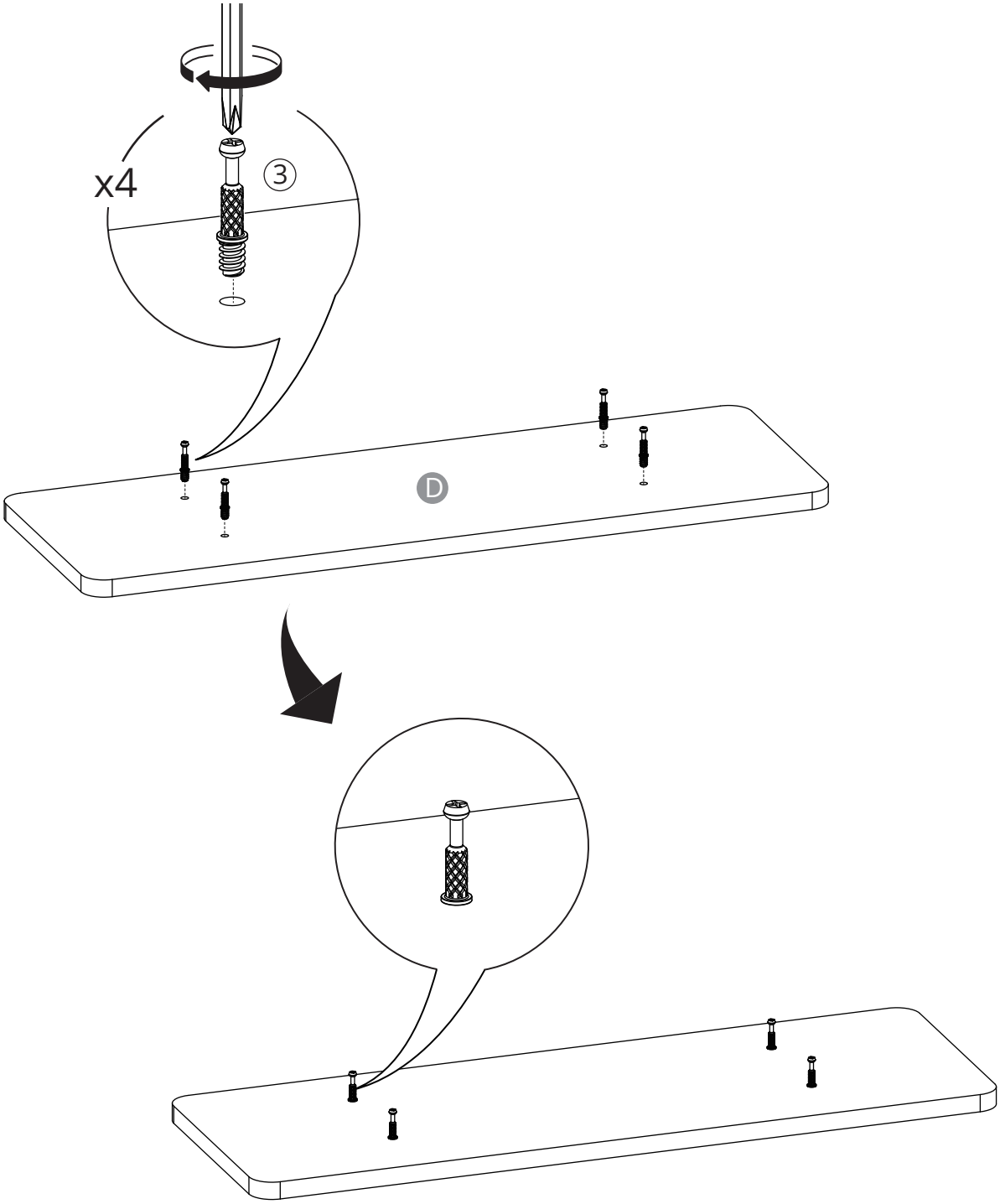

2

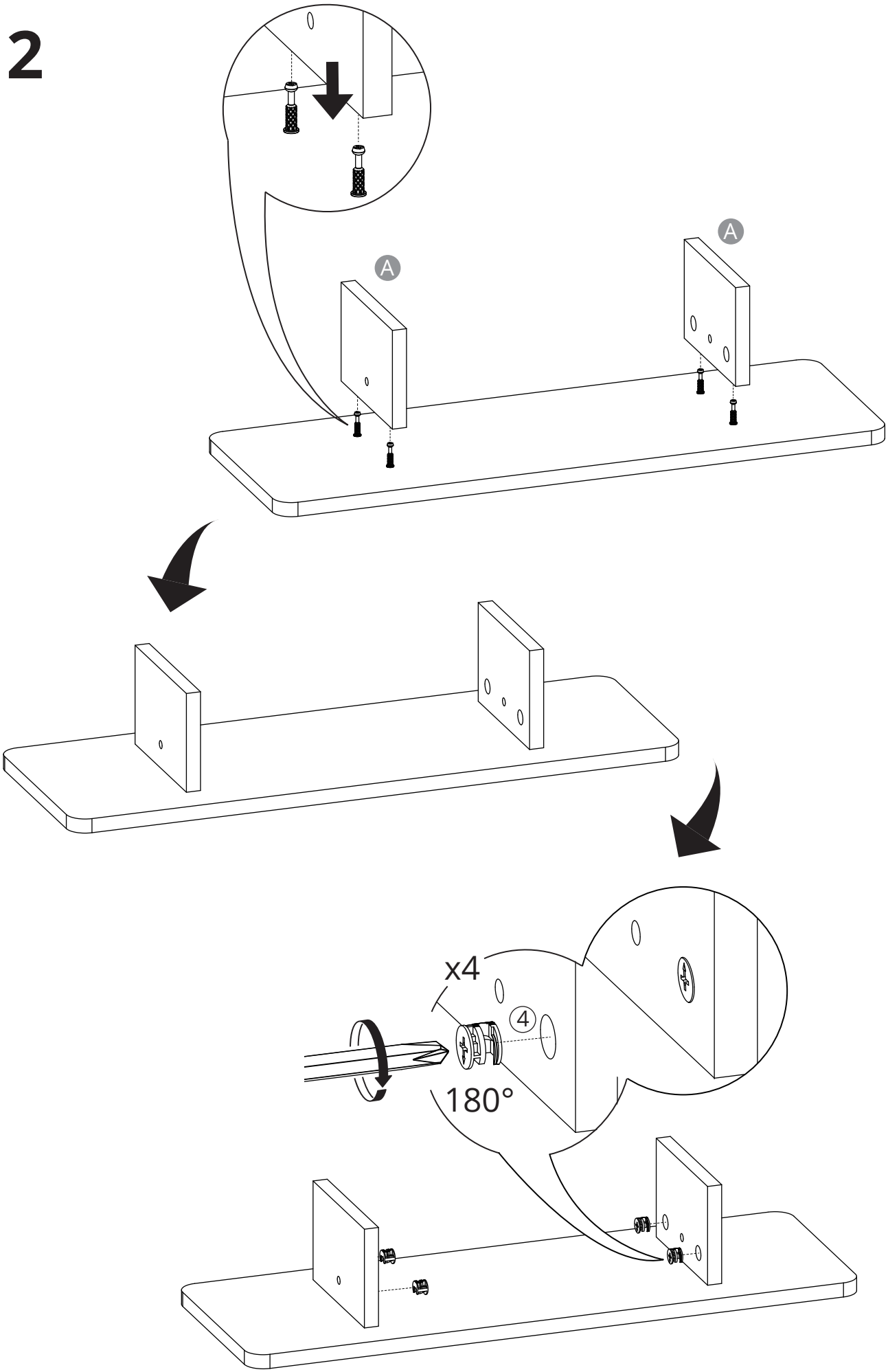

3

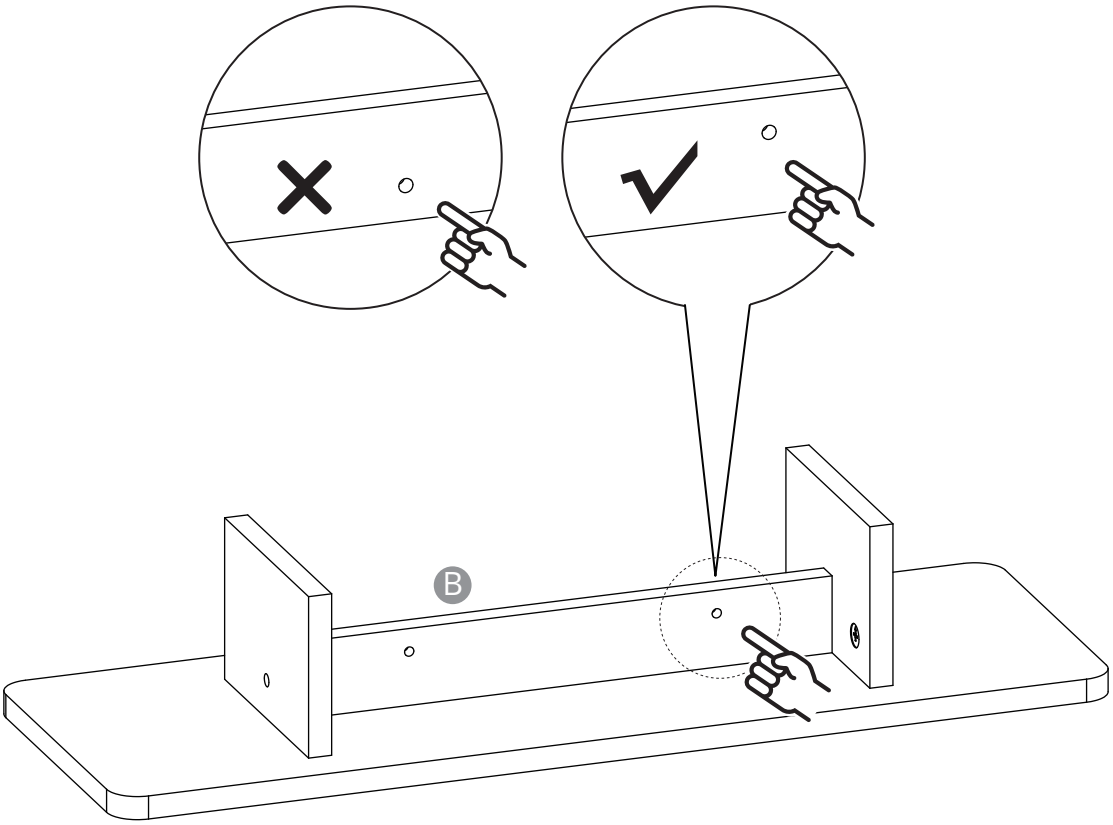

4

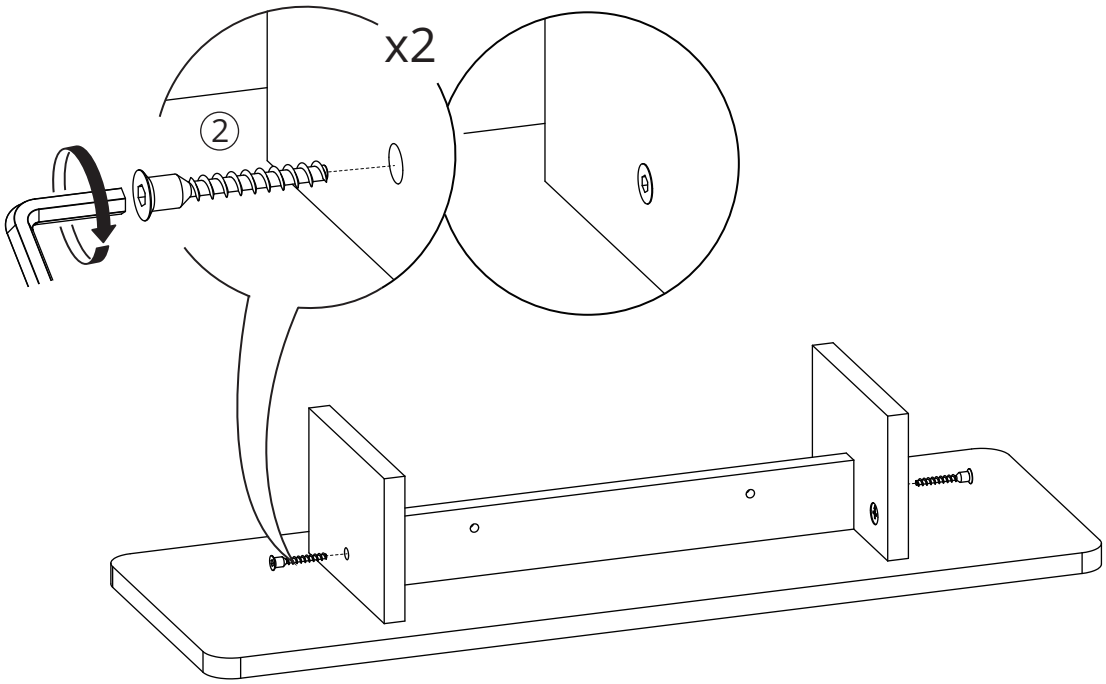

5

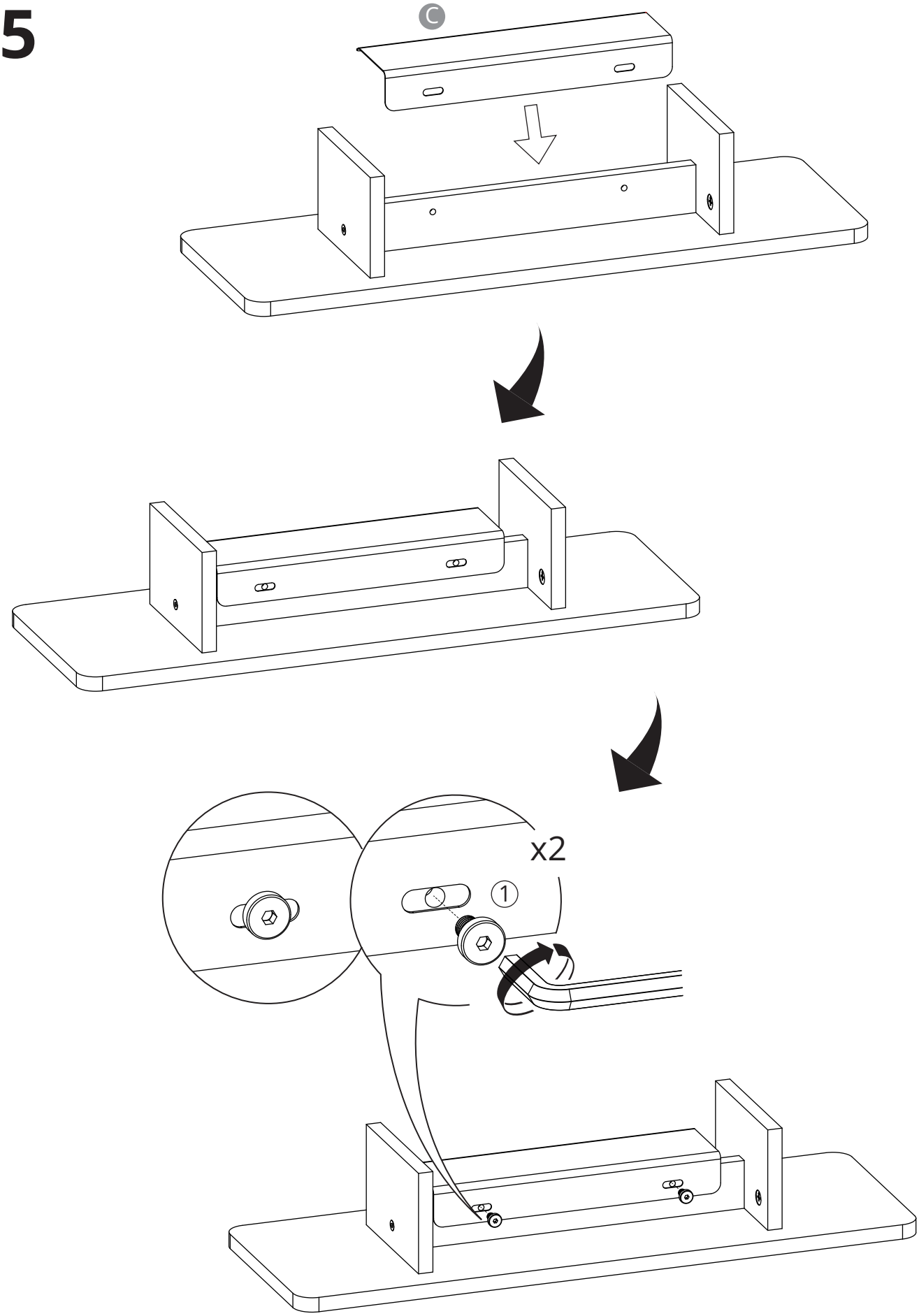

6

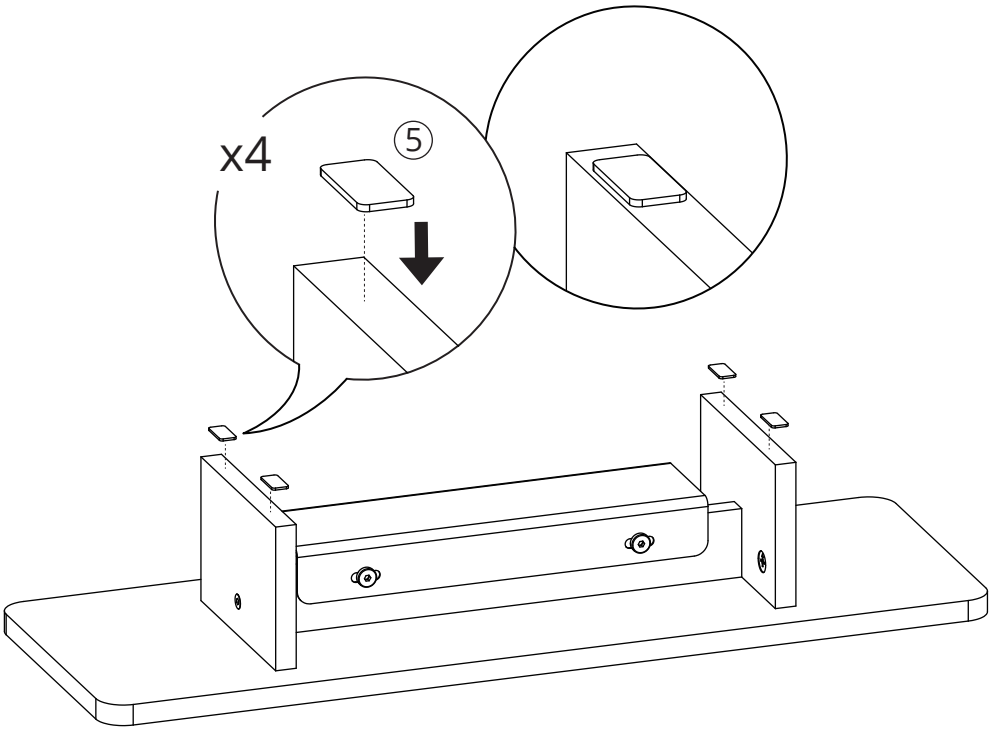
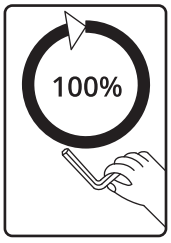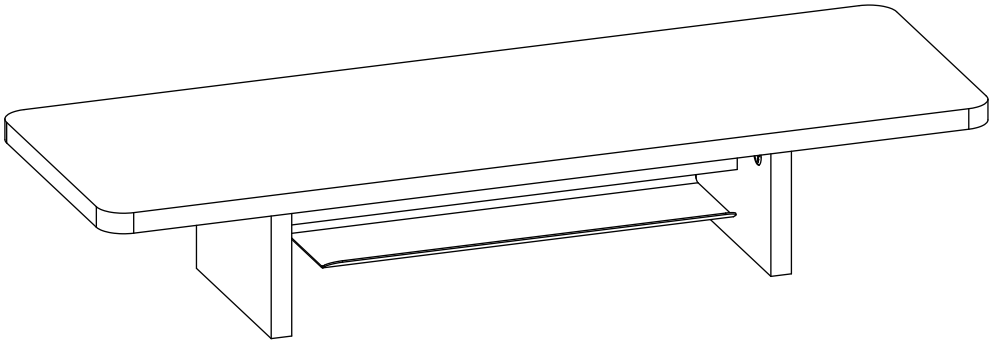
7